CUSTOMER SUPPLIED RESIN INFO	VALUE
PART WEIGHT	1.4 g
AVERAGE WALL THICKNESS	1 mm
POLYMER	PP
TRADENAME	PP RJ 370MO
MANUFACTURER	RJ 370MO
SPECIFIC GRADE	RJ 370MO
MELT FLOW INDEX	0
FILLER	--none--
FILLER CONTENT	--none--
FLAME RETARDANT	NO
MELT TEMPERATURE	240°C [464°F]
MOLD TEMPERATURE	20°C [68°F]
ESTIMATED CYCLE TIME	8.7 sec
ESTIMATED FILL TIME	0.35 sec

DRAWING 8051599 REV 0

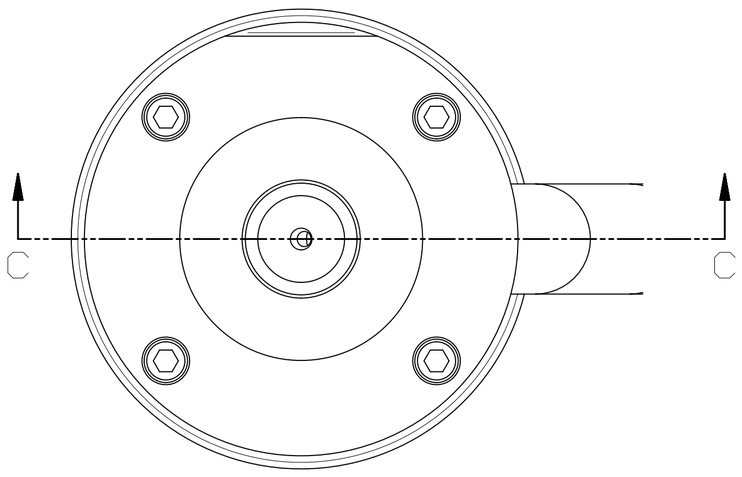

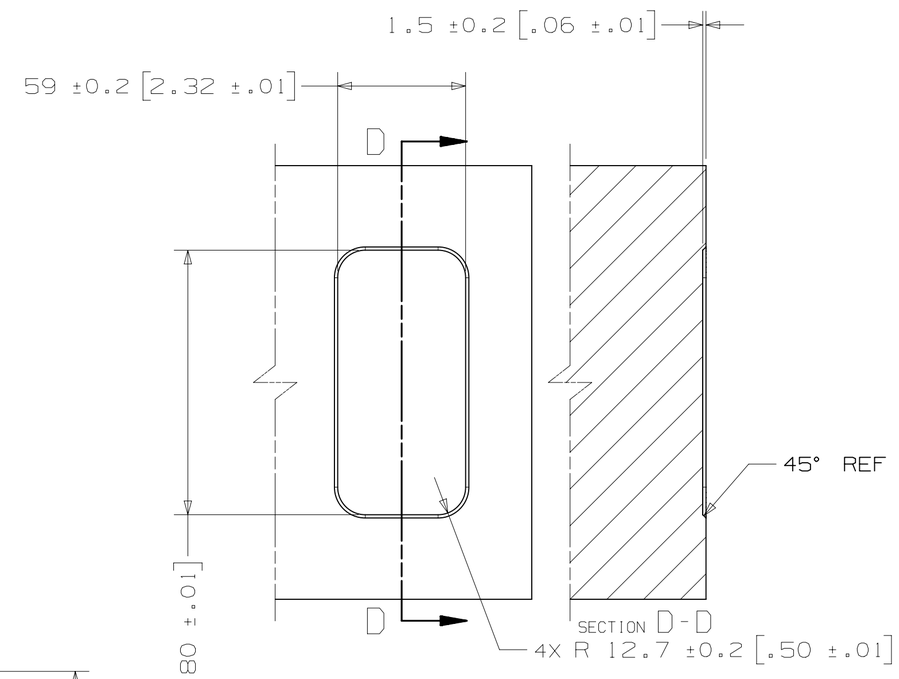

NAME PLATE INSTALLATION
SCALE 1:2

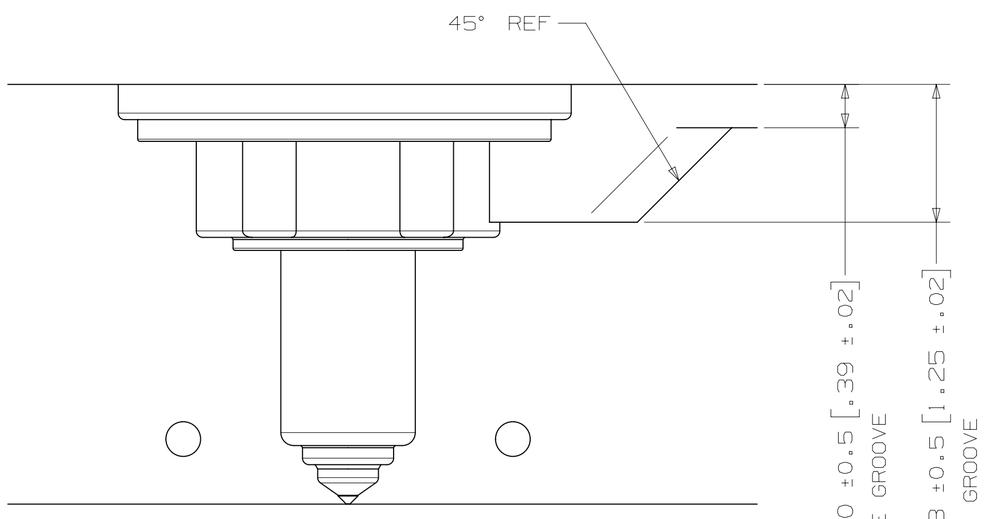

SECTION B-B

UNLESS OTHERWISE SPECIFIED TORQUE TO HUSKY SPECIFICATION HS 252		
PRELOAD CLASS HGT-80		
SIZE	Nm	lb-ft
#8	5	4
#10	7	5
1/4	16	12
5/16	35	25
3/8	60	45
7/16	95	70
1/2	150	110
5/8	290	210
3/4	500	360
7/8	790	580
1	1180	865
M4	4.6	3.4
M5	9.5	7.1
M6	16	12
M8	39	29
M10	77	57
M12	135	100
M14	215	160
M16	330	245
M20	650	480
M24	1100	810

RECOMMENDED GATE COOLING GUIDELINES

ADEQUATE COOLING IS ESSENTIAL FOR THE PROPER FUNCTION OF THIS SYSTEM. REFER TO THE HOT RUNNER PRODUCT GUIDE www.husky.ca FOR MORE DETAILED GUIDELINES.

RECOMMENDED GATE MATERIAL

NOTE: THESE MATERIALS MAY NOT OFFER THE DESIRED RESISTANCE TO ABRASIVE AND/OR CORROSIVE RESINS, FILLERS AND/OR ADDITIVES

AISI H13 (49-51 Rc)
AISI 420 (49-51 Rc)

RECOMMENDED GATE MANUFACTURING GUIDELINES

- HARDENED GATE INSERTS (49-51) ARE RECOMMENDED WHEN USING SOFTER CAVITY STEELS. SOFTER CAVITIES MAY BE ACCEPTABLE FOR CERTAIN APPLICATIONS. CONTACT YOUR HUSKY REPRESENTATIVE WITH QUESTIONS.
- EDM'ING THE GATE AREA CAUSES MICRO CRACKS WHICH LEAD TO BRITTLE GATE FAILURES. ALSO - DO NOT EDM THE MOLDING SURFACE WITHIN 2mm OF THE GATE HOLE.
- MACHINE THE GATE HOLE AFTER HARDENING TO AVOID EXCESSIVE QUENCH IN THE THIN SECTION DURING HEAT TREAT & RESULTING OVERHARDENING IN THE GATE AREA.
- RECESSED GATES ON THE PRODUCT REDUCE THE GATE AREA STRENGTH LEADING TO GATE FAILURES.
- WELDING THE GATE AREA INCREASES STRESSES AT THE GATE, SOFTENS THE AREA AROUND THE WELD AND CAN CAUSE GATE FAILURES.

HUSKY PROJECT: 0

CUSTOMER MOLD: TBD

CUSTOMER: HUSKY INJECTION MOLDING SYSTEMS LTD.
PART NAME: CARTRIDGE HOLDER
PART NUMBER: Cartridge Holder
PRODUCT: HOT RUNNER
DROPS: 24
NOZZLE SIZE: ULTRA 500
TIP STYLE: VG - GENERAL

REV	DATE	DESCRIPTION	NAME
			DRWN:
			CHKD:
			DRWN:
			CHKD:
			DRWN:
			CHKD:
			DRWN:
			CHKD:
		ORIGINAL ISSUE - DESIGNED BY:	DRWN:
			CHKD:

GD&T PER ASME Y14.5M-1994 AND HUSKY ADDENDUM - HS254

UNLESS OTHERWISE SPECIFIED:
CAD MODEL IS BASIC. NON-TOLERANCED DIMENSIONS ARE BASIC.

	METRIC	IMPERIAL
GENERAL TOLERANCE:	0.4 ?	0.02 ?
BROKEN EDGE/CHAMFER:	1 ±0.2 X 45°	0.04 ±0.01 X 45°
FILLET/ROUND:	R0.8 ±0.2	R0.03 ±0.01
SURFACE FINISH:	6.3	

FOR TORQUE SPECIFICATIONS, REFER TO HS 252

WEIGHT: - kg

METRIC

THIS DRAWING AND INFORMATION CONTAINED WITHIN IS CONFIDENTIAL AND/OR PROPRIETARY TO HUSKY INJECTION MOLDING SYSTEMS LTD. OR ONE OF ITS SUBSIDIARIES ("HUSKY") AND MAY NOT BE COPIED, DISCLOSED OR USED, IN WHOLE OR IN PART, WITHOUT THE PRIOR WRITTEN CONSENT OF HUSKY.

NO INTELLECTUAL PROPERTY RIGHTS ARE GRANTED INCLUDING ANY LICENSE IMPLIED OR OTHERWISE.

ALL RIGHTS RESERVED. COPYRIGHT 2017 HUSKY.

HUSKY

TITLE: Hot Sprue Assembly U750 HT U

SCALE	SIZE	DRAWING	REV
1:1	A1R	8051599	0

SHEET 1 OF 2

INSTALLATION DRAWING

DRAWING 8051599 REV 0

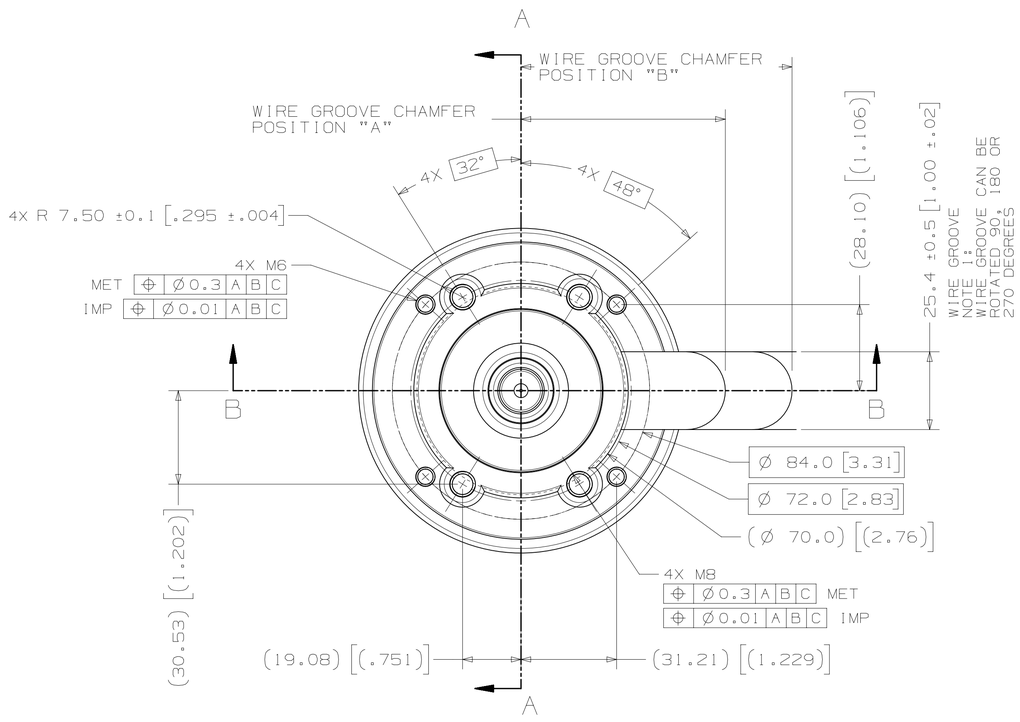

TOP VIEW
SCALE 1:1

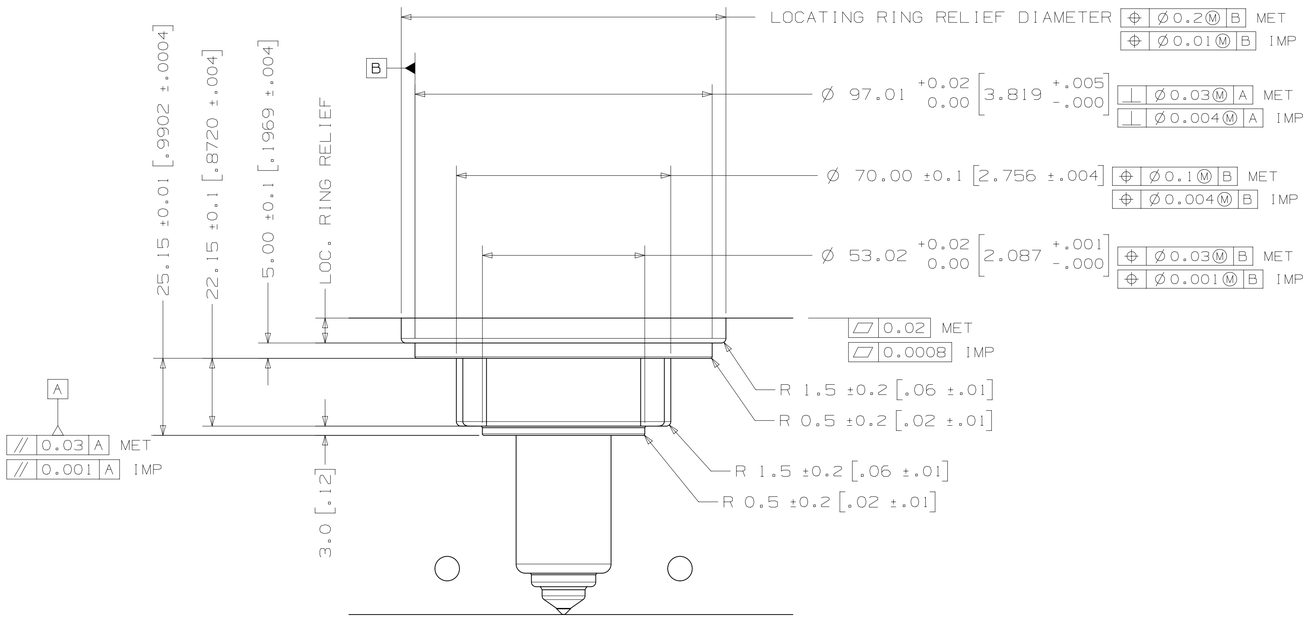

SECTION A - A
SCALE 1:1

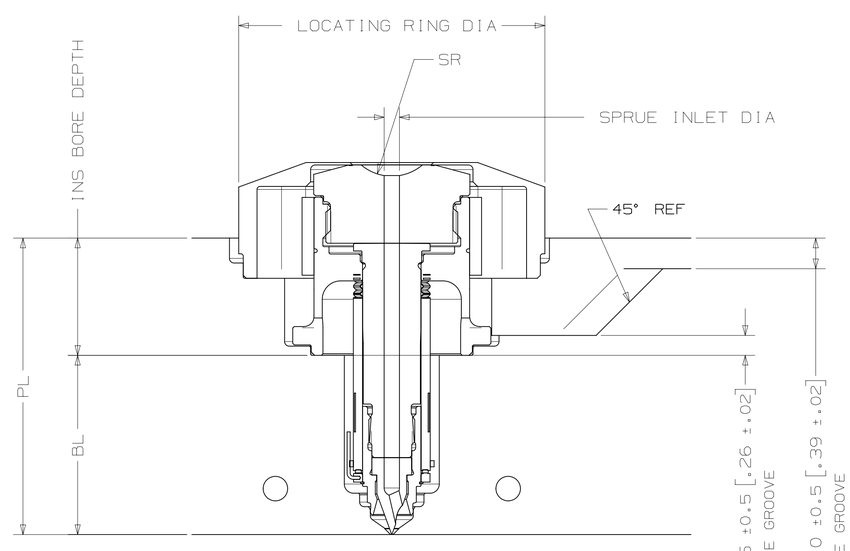

SECTION C - C
SCALE 1:1

	LOCATING RING OUTER DIAMETER	LOCATING RING RELIEF DIAMETER (±0.5mm)	WIRE GROOVE CHAMFER POSITION "A" (±2.0)	WIRE GROOVE CHAMFER POSITION "B" (±2.0)	SPRUE BUSHING	
					SEAL-OFF TYPE	CHANNEL Ø IN - OUT
U750	100mm	106.0	66.7	88.5	FLAT	11.5-THRU
	101.3mm (3.99")	106.0	66.7	88.5	SR 12.7	
					SR 15.5	
	125mm	130.0	78.7	100.5	SR 19.05	
					SR 20	

NOZZLE	TIP	NOZZLE HOUSING LENGTH	BL AT DELTA TEMP											
			60° -79°	80° -99°	100° -119°	120° -139°	140° -159°	160° -179°	180° -199°	200° -219°	220° -239°	240° -259°	260° -279°	280° -300°
U750	HT-U	50	38.46		38.48			38.51			38.54			38.56
		60	48.47		48.50			48.53			48.56			48.60
		70	58.48		58.51			58.55			58.59			58.63
		80	68.49		68.52			68.57			68.62			68.67
		90	78.50		78.54			78.59			78.65			78.70
		100	88.51		88.55			88.61			88.67			88.74
		110	98.51		98.56			98.63			98.70			98.77
		120	108.52		108.57			108.65			108.73			108.80
		130	118.53		118.59			118.67			118.76			118.84
		140	128.54		128.60			128.69			128.78			128.87
		150	138.55		138.61			138.71			138.81			138.91
		160												
		170												
		180												
		190												
		200												
		210												
		220												
		230												
		240												
		250												
		260												
		270												
		280												
		290												
		300												

DELTA TEMP = TEMP OF MELT - TEMP OF MOLD

REV	DATE	DESCRIPTION	NAME
			DRWN:
			CHKD:
			DRWN:
			CHKD:
			DRWN:
			CHKD:
			DRWN:
			CHKD:
		ORIGINAL ISSUE - DESIGNED BY:	DRWN:
			CHKD:

FOR TORQUE SPECIFICATIONS, REFER TO HS 252

WEIGHT - kg

METRIC

THIS DRAWING AND INFORMATION CONTAINED WITHIN IS CONFIDENTIAL AND/OR PROPRIETARY TO HUSKY INJECTION MOLDING SYSTEMS LTD. OR ONE OF ITS SUBSIDIARIES ("HUSKY") AND MAY NOT BE COPIED, DISCLOSED OR USED, IN WHOLE OR IN PART, WITHOUT THE PRIOR WRITTEN CONSENT OF HUSKY.

NO INTELLECTUAL PROPERTY RIGHTS ARE GRANTED INCLUDING ANY LICENSE IMPLIED OR OTHERWISE.

ALL RIGHTS RESERVED. COPYRIGHT 2017 HUSKY.

HUSKY

TITLE
Hot Sprue Assembly
U750 HT U

SCALE	SIZE	DRAWING	REV
1:1	A0R	8051599	0

SHEET 2 OF 2

ASSEMBLY DRAWING

DRAWING 8051599 REV 0

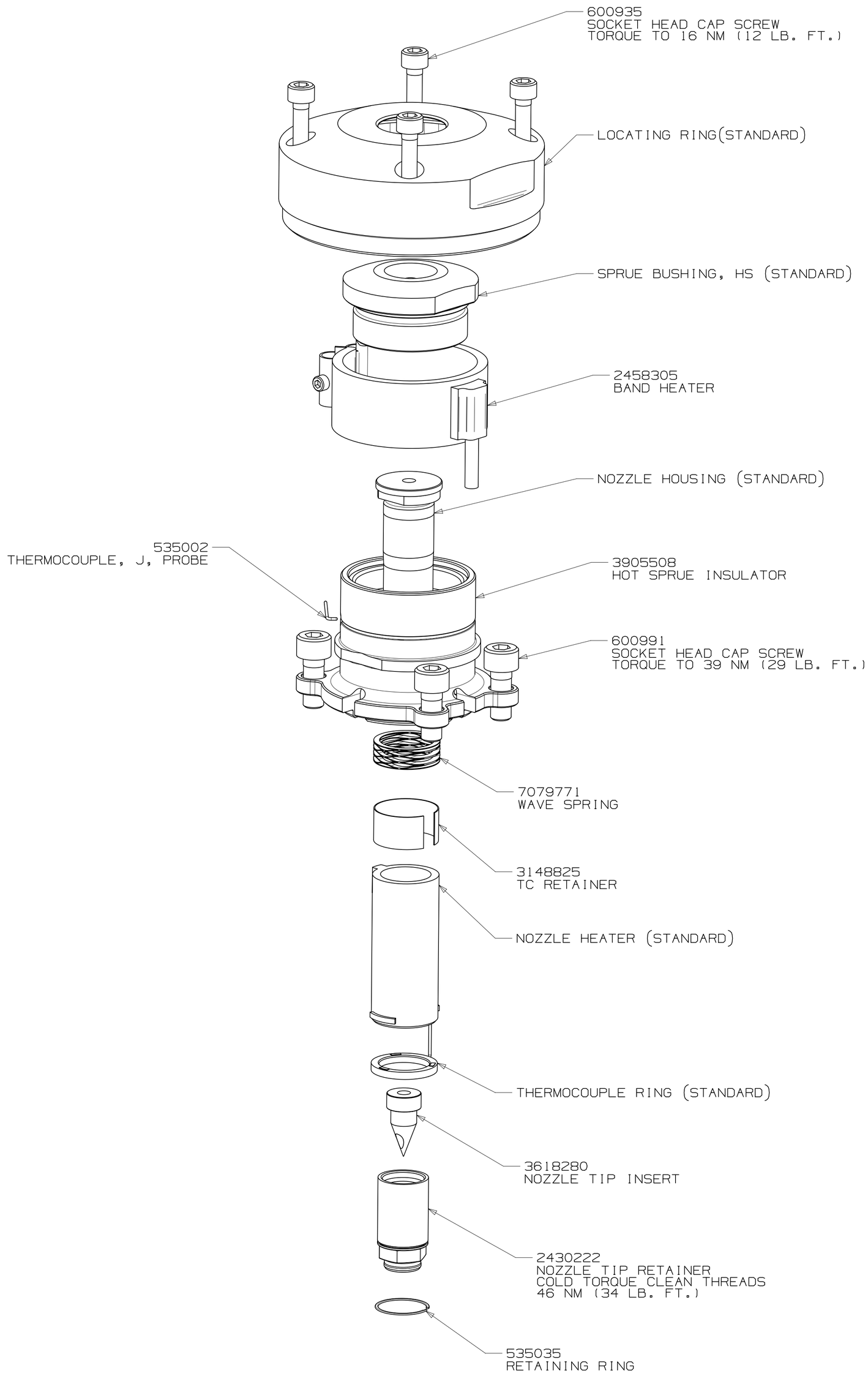

COMP_EXPLODED VIEW
SCALE 1:1

REV	DATE	DESCRIPTION	NAME
			DRWN:
			CHKD:
			DRWN:
			CHKD:
			DRWN:
			CHKD:
			DRWN:
			CHKD:
		ORIGINAL ISSUE - DESIGNED BY:	DRWN:
			CHKD:

FOR TORQUE SPECIFICATIONS, REFER TO HS 252

WEIGHT - kg

METRIC

THIS DRAWING AND INFORMATION CONTAINED WITHIN IS CONFIDENTIAL AND/OR PROPRIETARY TO HUSKY INJECTION MOLDING SYSTEMS LTD. OR ONE OF ITS SUBSIDIARIES ("HUSKY") AND MAY NOT BE COPIED, DISCLOSED OR USED, IN WHOLE OR IN PART, WITHOUT THE PRIOR WRITTEN CONSENT OF HUSKY.

NO INTELLECTUAL PROPERTY RIGHTS ARE GRANTED INCLUDING ANY LICENSE IMPLIED OR OTHERWISE.

ALL RIGHTS RESERVED. COPYRIGHT 2017 HUSKY.

HUSKY

TITLE
Hot Sprue Assembly
U750 HT U

SCALE	SIZE	DRAWING	REV
1:1	AIR	8051599	0
SHEET 2 OF 2			